Kreg™ POCKET HOLE SYSTEMS™

Pocket Hole Plans for Patio Chair #PC06

Supplies Needed:

SML-C150W screws (86)
SML-C250W screws (28)
SRW-C2W screws (8)
Cedar Pocket Hole Plugs (100)

Patio Chair-Building Notes

Simple and easy-to-build assemblies make this chair a snap to make, whether it is one chair or several. Its back is tall enough and the seat width and depth are big enough to accommodate most back and seat cushions should you desire additional comfort. If you plan to use cushions with your chair, adjust the seat height measurements accordingly to suit your needs.

This project will introduce you to drilling pocket holes center-to-center (c.c.) at 7/8" and 1 7/16" apart, joining 1 1/2" thick parts using Position 3, and using the standard Kreg Jig setting, Position 1, to use pocket hole screws for attaching the backrest and seat. Roundovers smooth the lines of assembly for a neat and clean look. Sun-Seal screws with their weather resistant coating greatly extend the life of your project outdoors. Protect the beautiful color of the Western Red Cedar with Premium 2000 Crystalac Satin finish.

Design Note: We used nominal 2x4 cedar stock 1 1/2" thick, for the heavier parts and 5/4 decking material which actually measures 1" thick, for the thinner parts. Pocket hole plugs conceal the screws and provide an interesting contrast. To order pocket hole plugs see the buying information at the end of the notes.

Review all drawings before starting construction. Bill of materials and building notes guide you through making one chair. Adjust the quantity of parts to make more chairs accordingly.

D-1 Backrest & Seat

1. From 1" cedar decking material, rip and trim parts A through E to the sizes shown to create the backrest and seat frame assemblies. For a clean overall look, trim out large knots and other surface defects when cutting out the parts. Use chalk to make a face mark to identify the face side of each part.
2. Rout 3/16" roundovers along all edges and ends of parts A through E. Sand the routed edges clean and smooth with a fine grit foam sanding pad.
3. Referring to the D-2 Pocket Hole Detail drawing, layout the 7/8" and 1 7/16" c.c. pocket holes at both ends of the rails on their backside where shown. Then drill all of the pocket holes in the parts using Position 1.
4. To make consistent 1/4" spaces between the rails, cut two spacers from 1/4" thick scrap material to 4" long. Assemble the backrest and seat by first joining the C-D-E rails to one stile A-B. With each assembly, start at one end and work toward the other. Apply Excel Glue to the end of the first rail and position it flush to the end of the stile and secure the parts with your face clamp. Then drive the SML-C150W Sun-Seal screws.
5. Set one of the 1/4" spacers against the edge of the first rail, apply glue to the end of the next rail, position it against the spacer, secure with the face clamp, and drive the screws. Repeat the process until the C-D-E rails are attached.
6. Now add the other stile A-B aligning the rails as before, applying glue, spacing apart, clamping, and driving the screws. The D-1 Backrest & Seat drawing shows what the final assemblies will look like.
7. To shape the assemblies, refer to the D-3 Half Pattern Grid drawing and make a template from stiff paper or file folder stock. Use the half pattern to pencil trace the shape to the top edge of the backrest and the front edge of the seat. Cut along the lines with a jigsaw and sand the sawn edges smooth. Then rout 3/16" roundovers along all outside top and bottom edges of the assemblies. Sand the routed edges clean and smooth with a fine grit foam sanding pad. Plug the pocket holes.

Making two assemblies (Left and Right)

D-4 Leg Frames

1. Rip and trim the legs F and rails G to size.
2. Rout 3/16" roundovers along all edges of the parts, sanding the routed edges smooth.
3. Layout the 1 7/16" c.c. pocket holes at the ends of the G rails using Position 3, then drill the holes.
4. Apply Excel Glue to the ends of the G, position and clamp the parts. Drive SML-C250W Sun-Seal screws to secure the joints.
5. Next layout the 7/8" c.c. pocket holes at the top ends of the legs, and the two single pocket holes on rail G for attaching the armrest later. Drill the holes using the standard setting, Position 1.

D-5 Armrest

1. Rip and trim two H blanks to size. To make an identical pair of parts (one left and right), use carpet tape to stick the blanks together edges and ends flush. On one of the blanks, layout the shape as shown.
2. Cut the armrest stack to shape with a jigsaw. Sand the sawn edges smooth. Separate the parts by applying a small splash of acetone solvent to the edges of the parts to release the carpet tape. DO NOT force the pieces apart with a wedge as it could scratch or dent the cedar.
3. Along all edges, rout 3/16" roundovers. Sand the routed edges with a fine grit foam sanding pad.
4. Each armrest is assembled to the leg frame with the inside edges of the armrest flush with rail G, and overhangs the leg 1" at the back edge. Apply glue to the top edge of the leg frame, position and clamp armrest H, and secure the assembly by driving SML-C150W Sun-Seal screws.
5. Fill the screw holes in all of the parts using cedar pocket hole plugs. Sand all of the plugs flush.

D-6 Seat Frame

1. Cut parts I&J from 1 1/2" cedar stock. Trim the ends of the I parts at 84 degree angles and the bottom end of the J parts at 81 degrees as shown. With each part you will be making an identical pair (left and right). Mark each part with chalk for orientation later.
2. On the top end of the J parts scribe and then cut the radius. Sand all edges smooth, then rout 3/16" roundovers along all edges. Sand the routed edges with a fine grit foam sanding pad.
3. Layout the 1 7/16" c.c. pocket holes (Position 3) at both ends of part I, and the bottom end of J, on the <u>inside</u> surface of the parts. Then layout the single pocket holes for Position 1, for attaching the backrest and seat assemblies where shown. Drill the pocket holes in the parts.
4. Refer to the D-7 Seat Frame Assembly drawing. Apply Excel Glue to the end of the J parts, position J to I with the corners flush as shown and clamp. Drive SML-C250W Sun-Seal screws to secure the joints.
5. Fill the two screw holes that join the parts together with cedar pocket hole plugs. DO NOT fill the remaining holes yet.
6. For assembling the IJ frames to the leg assemblies, refer to the D-8 Backrest Detail drawing. As shown, layout the centerpoints for the 3/8" counterbored screw holes. Drill the holes 1/2" deep.
7. From 1 1/2" cedar stock, rip and trim the front and back K and center rail L to size. Joint or rip the top edges of the K rails at a 6 degree angle. Do not bevel center rail L.
8. Rout 3/16" roundovers along all edges of parts K&L. Sand the routed edges with a fine grit foam sanding pad.
9. Layout 1 7/16" c.c. pocket holes on the <u>backside</u> of the K&L rails. Drill the pocket holes using Position 3 and Position 1 where shown.

D-9 Section View

1. To make assembling parts easier, make two spacer blocks from 2x4 stock, one piece 10 7/8" long and the other 13 1/4" long.
2. Lay one of the leg assemblies on the bench with the inside surface facing up. Position the long spacer block at the front edge of the leg frame with the bottom edges flush, clamp the spacer to the leg and position the front K rail. Apply glue to the end of the rail and clamp it to the leg frame, check for square, and then drive the SML-C250W screws. Repeat for the back K rail using the shorter 10 7/8" spacer block.
3. Join the other leg frame to the assembly. Apply glue to the ends of rails K, position and check for square, then clamp using the spacer blocks for support. Drive the screws.
4. Assemble center rail L as shown. Drive SML-C250W screws to secure the part.
5. Slide seat frame IJ between the K rails. Apply glue to the mating surfaces of the assemblies, and secure the parts by driving SML-C250W screws through each end of I into the K rails. Then on part J, at the 3/8" counterbored hole locations, drive SML-C2W screws to fasten J to the leg frame. Repeat for assembling the other IJ seat frame.
6. Fill the pocket holes at the ends of rails I with cedar pocket hole plugs, and sand smooth. Cut 1/2" long plugs from cedar pocket hole plugs to fill the counterbored screw holes in the J parts.
7. To position the seat and backrest, cut two temporary spacer blocks to 1 7/8" wide. Position one block against the inside edge of J. Apply glue to the mating surfaces, clamp, then secure the seat to the assembly by driving SML-C150W screws at the locations along the length of rails I. Repeat for the other side. Drive the same screws in the pocket holes along the length of front rail K, and center rail L. Then assemble the backrest using a 1 1/4" spacer.
8. Fill all screw holes with cedar pocket hole plugs. Later, sand the plugs off flush.

Bill of Materials

For a complete list of pocket hole plans and accessories available from Kreg Tool Company, please contact your local dealer, call 1-800-447-8638, or visit www.kregtool.com.

Ltr.	Name	T	W	L	Qty.	Material
A	Stiles	1″	4″	22 1/4″	2	W. Red Cedar
B	Stiles	1″	4″	19″	2	"
C	Decorative Rails	1″	4″	16″	2	"
D	Wide Rails	1″	4″	16″	4	"
E	Narrow Rails	1″	3″	16″	5	"
F	Legs	1 1/2″	3″	23″	4	"
G	Rails	1 1/2″	3″	16 1/2″	2	"
H*	Armrests	1″	4″	25″	2	"
I*	Seat Support	1 1/2″	2 3/4″	19 9/16″	2	"
J*	Backrest Support	1 1/2″	2 3/4″	20 3/8″	2	"
K	Front/Back Rails	1 1/2″	2 3/4″	22″	2	"
L	Center Rail	1 1/2″	2 3/4″	19″	1	"

*Initially cut large.

Supplies:

Excel Glue
SML-C150W Sun-Seal screws
SML-C2W Sun-Seal screws
SML-C250W Sun-Seal screws
Carpet tape
Premium 2000 Crystalac Clear Satin finish
Cedar Pocket Hole Plugs

D-1

Backrest & Seat

(Drill holes using Position 1)

Use SML-C150W screws to join parts.

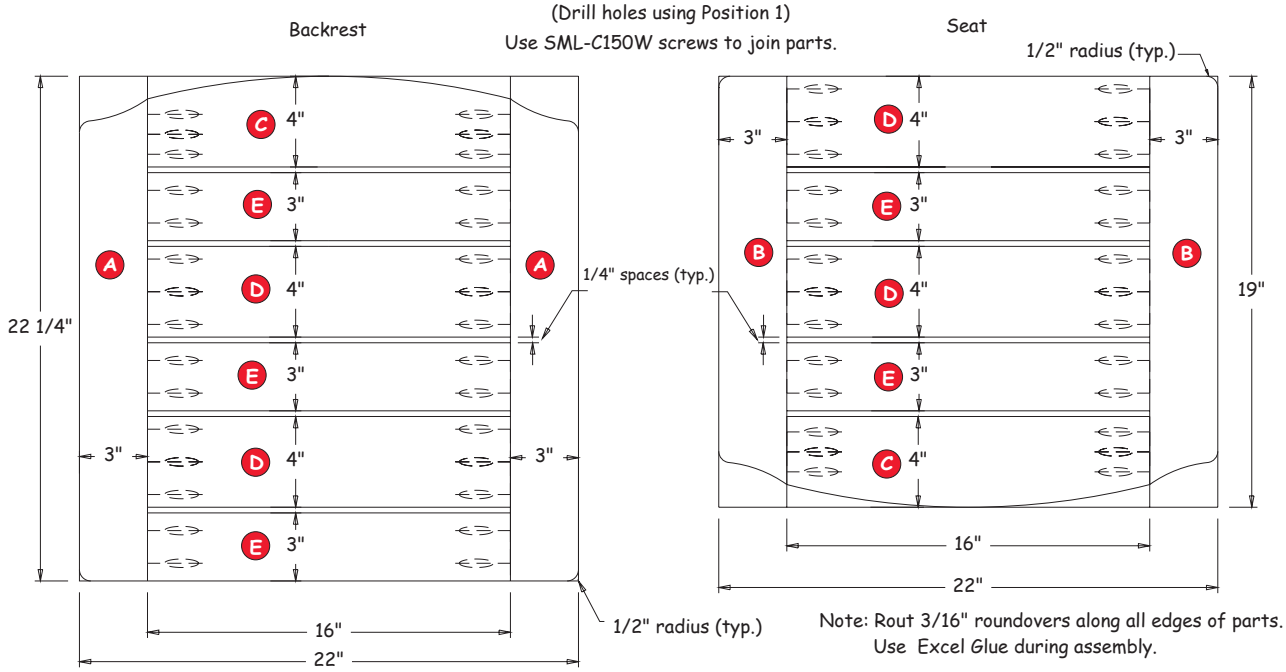

Note: Rout 3/16" roundovers along all edges of parts.
Use Excel Glue during assembly.

Plug pocket holes after assembly.

D-2

Pocket Hole Detail

(Drill holes using Position 1)

7/8" c.c. Pocket Hole Layout for C Rails

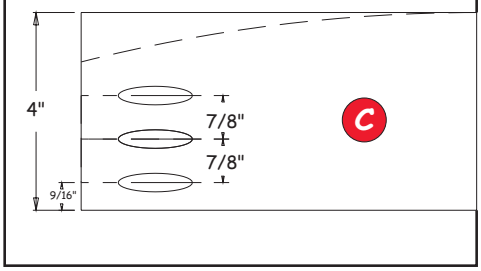

1 7/16" c.c. Pocket Hole Layout for D Rails

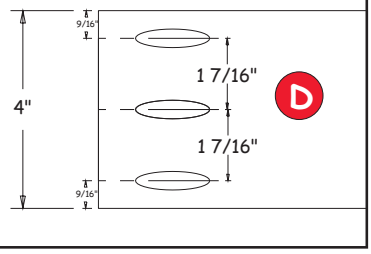

1 7/16" c.c. Pocket Hole Layout for E Rails

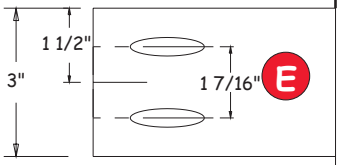

D-3

Half Pattern Grid

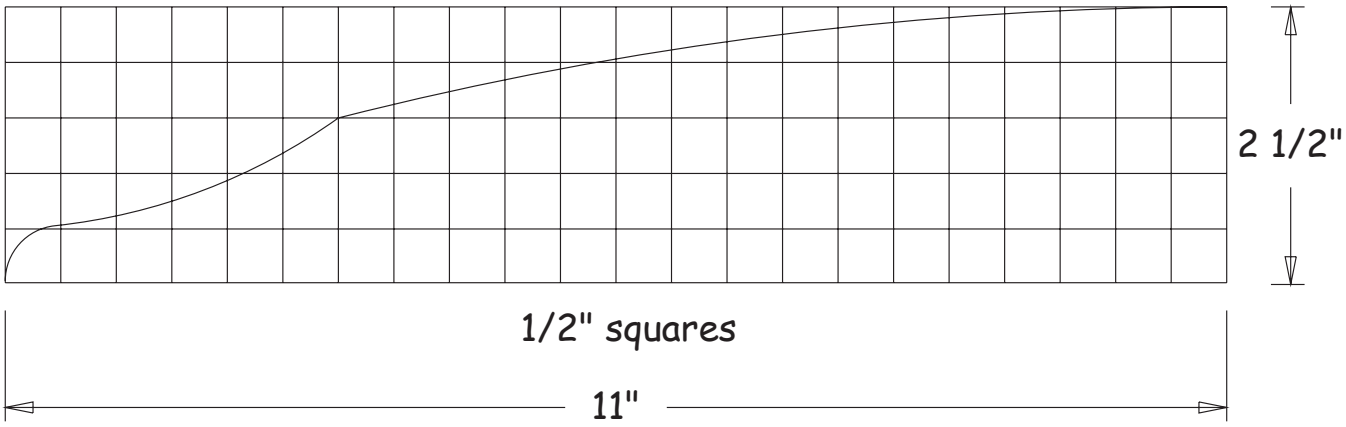

D-4

Leg Frames

(Inside surface shown)

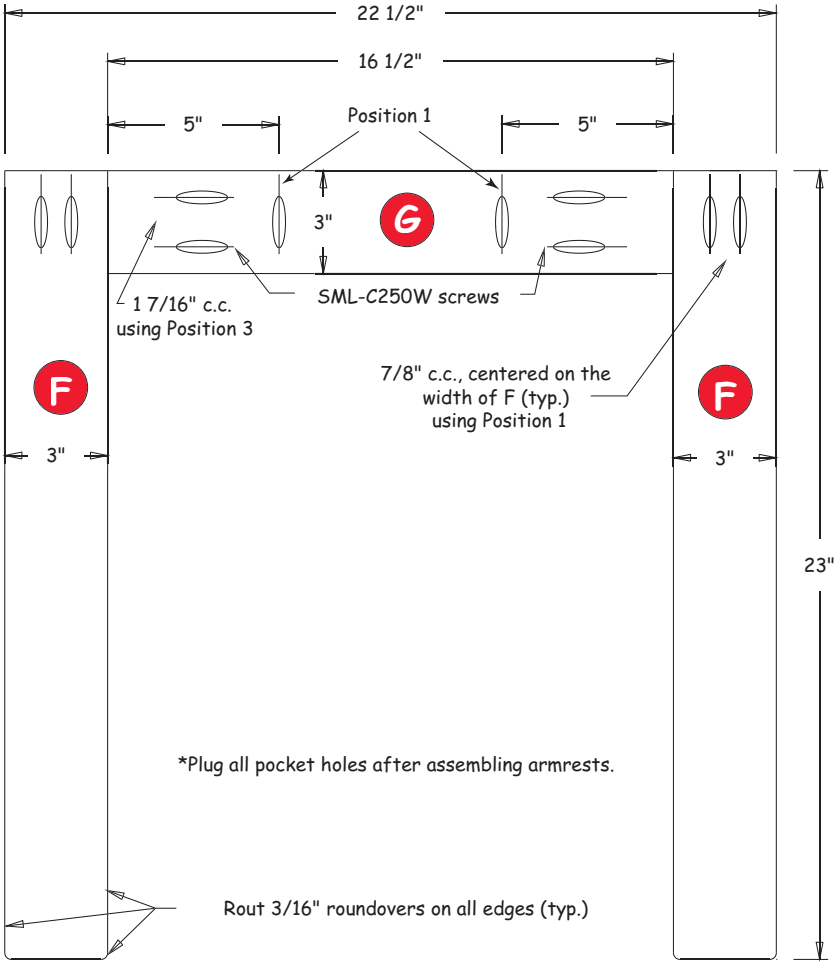

D-5

Armrest

(Right armrest shown)

Rout 3/16" roundovers along all edges after shaping.

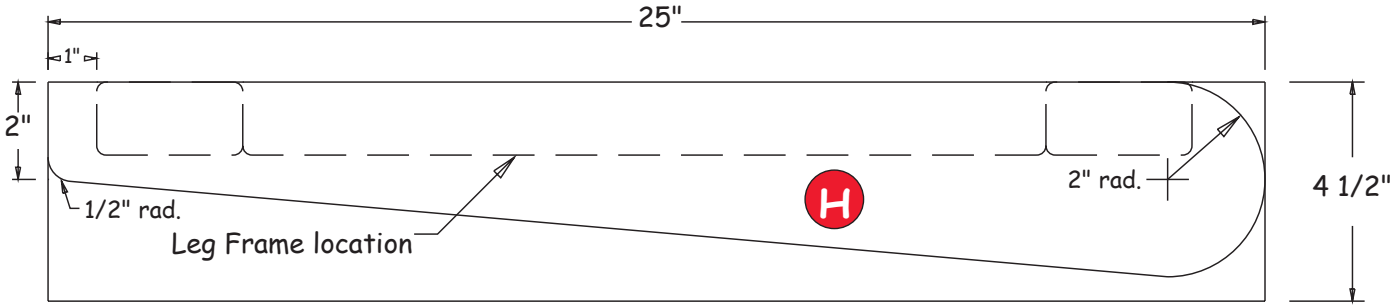

Seat Frame

(Left side parts shown)

D-6

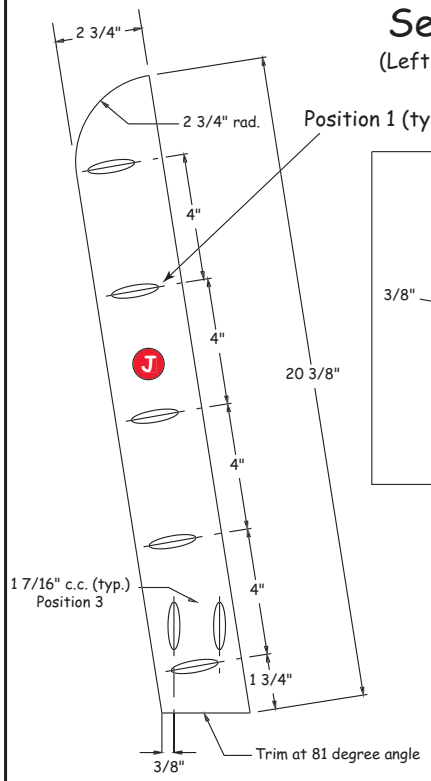

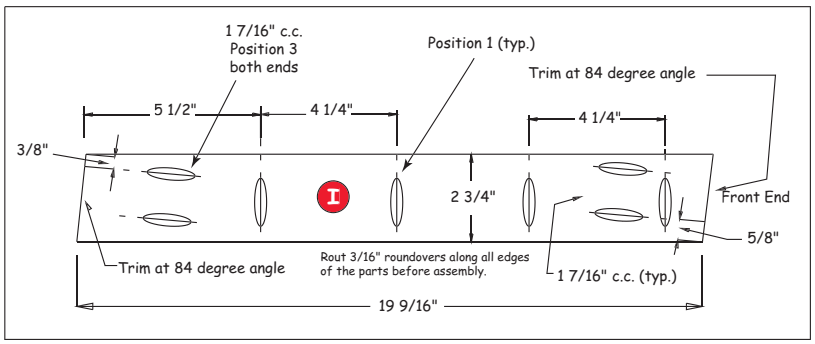

D-7

Seat Frame Assembly

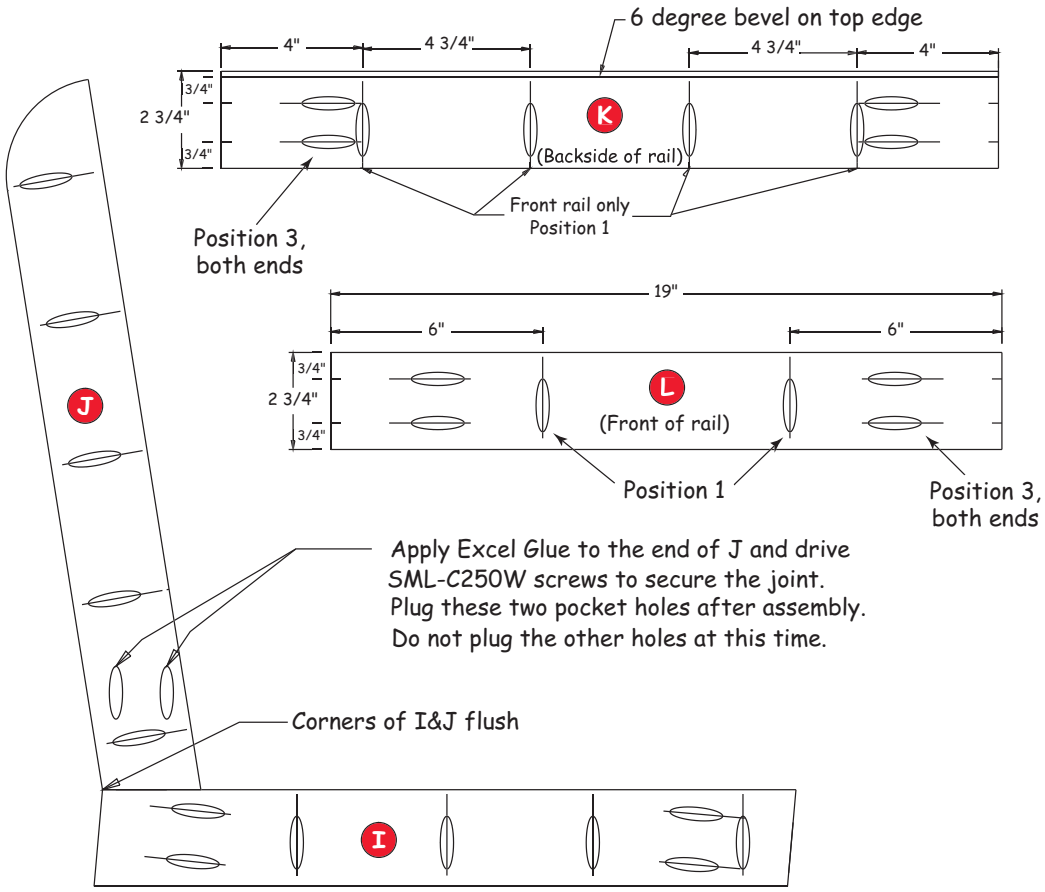

D-8

Backrest Detail

(Left side shown)

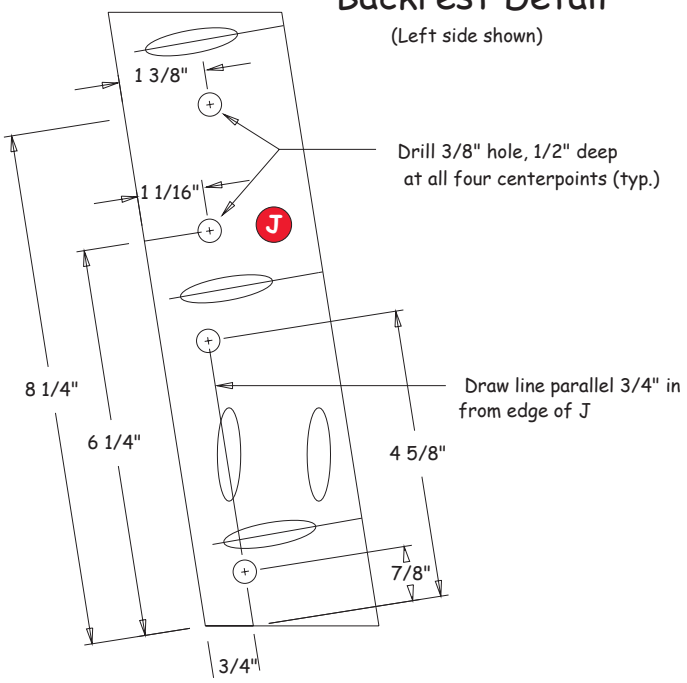

D-9
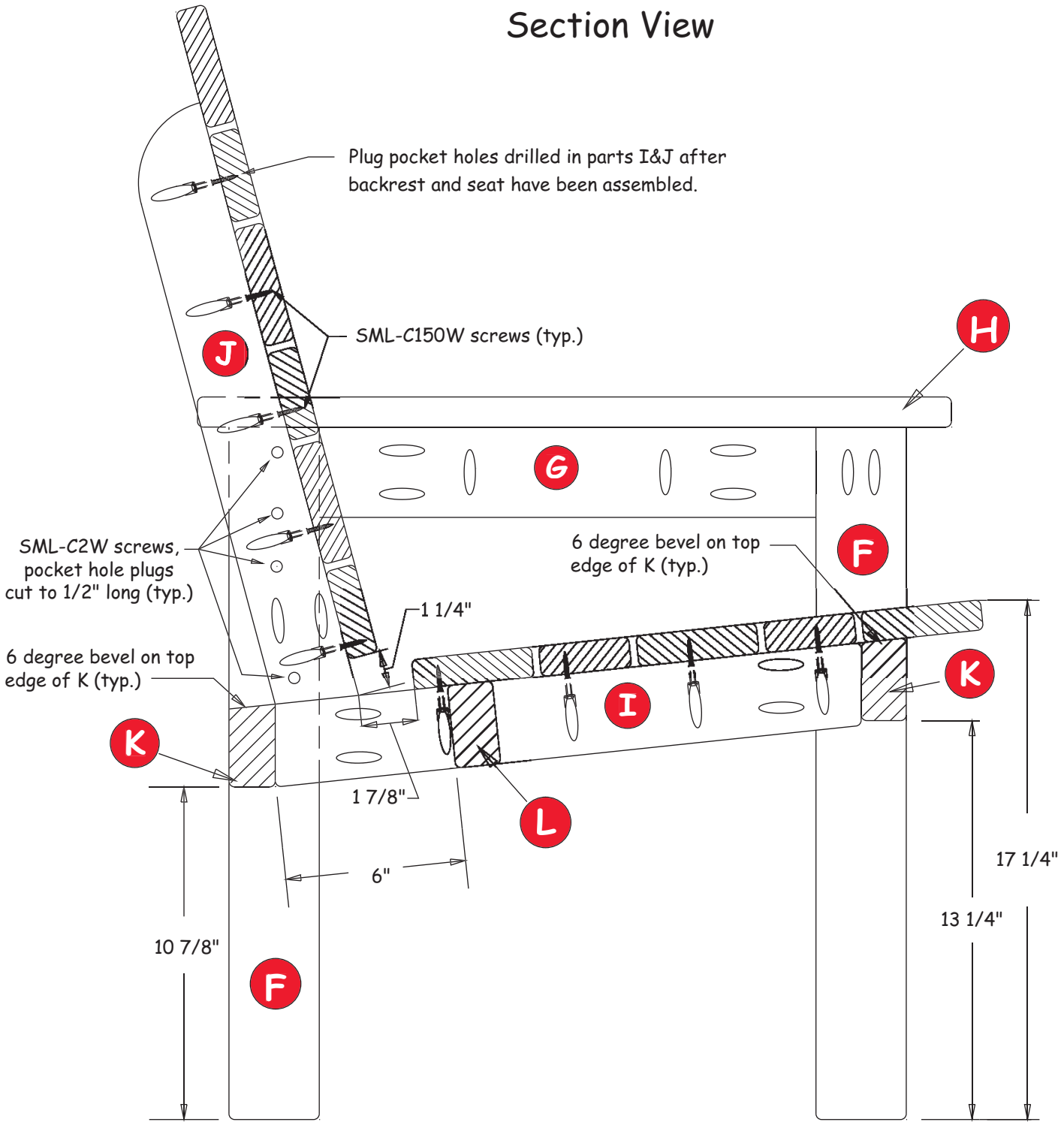
Section View